625mm

Drilling Template
【G0,G1XX(E,M)-62,65,66,67,69】

Scale: 1:1
Unit: mm/(inch)

Mortise drilling template to 66

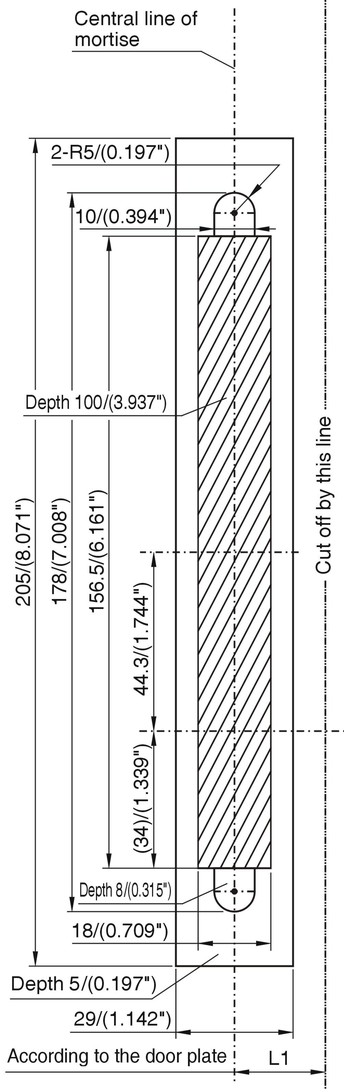

Make sure: L1=L2

Mortise drilling template to 62,65,67,69

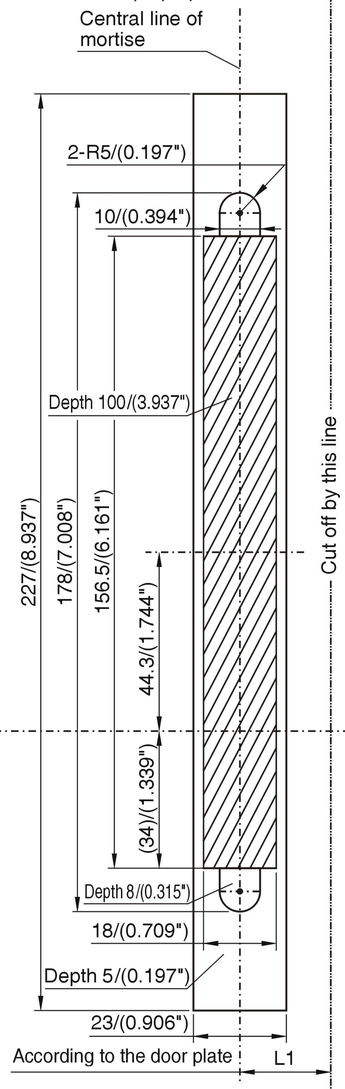

Make sure: L1=L2

Mortise drilling template to 62,65,67,69

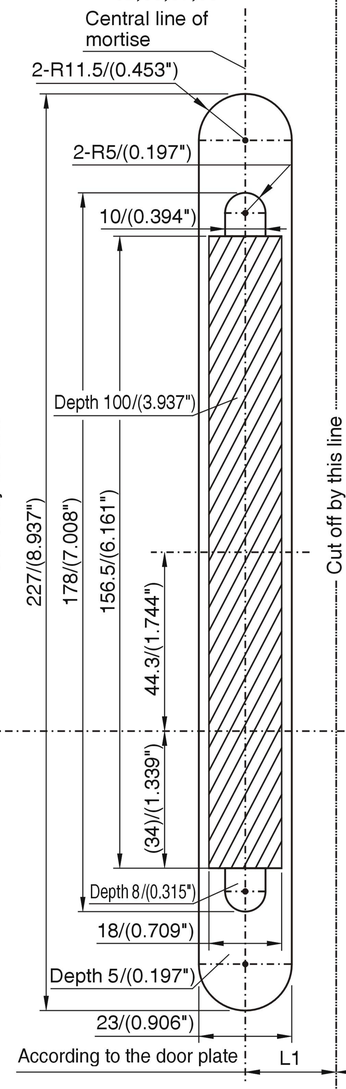

Make sure: L1=L2

★ Note: drill the circle 1 hole from inside when left hand door; drill the circle 2 hole from inside when right hand door.

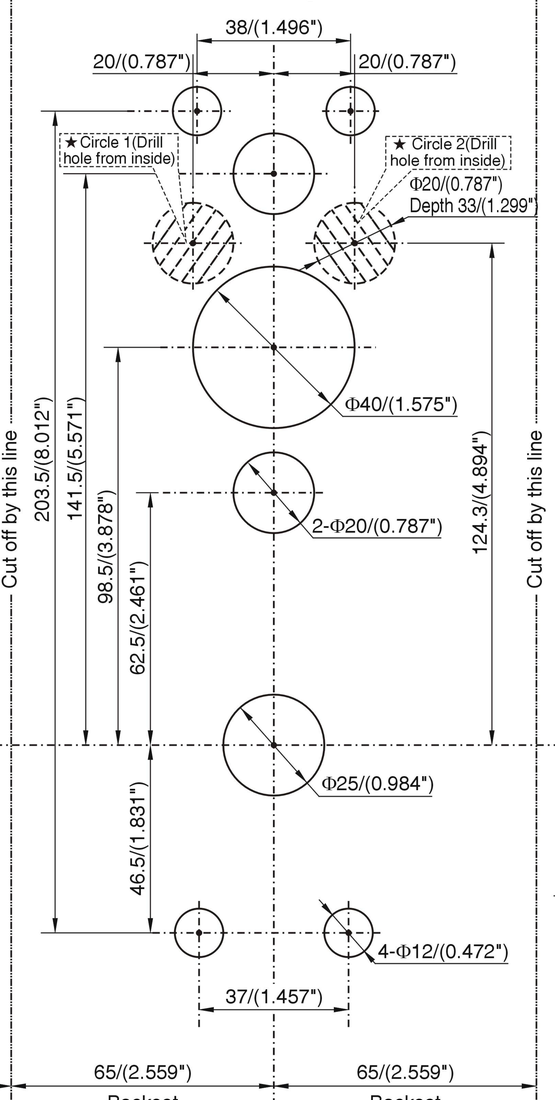

Strike plate drilling template to 62,65,66,67

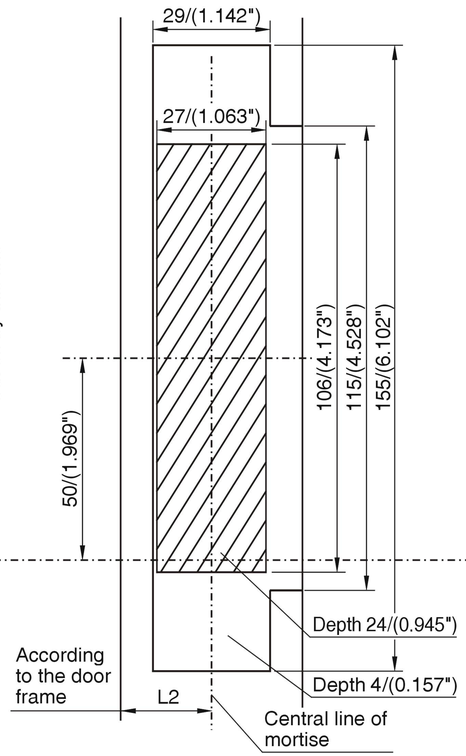

Strike plate drilling template to 69

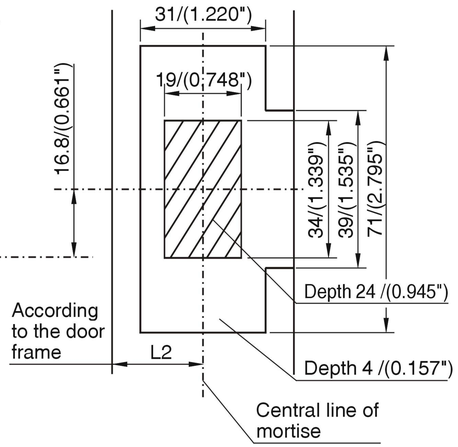

300mm

abiLine_ A